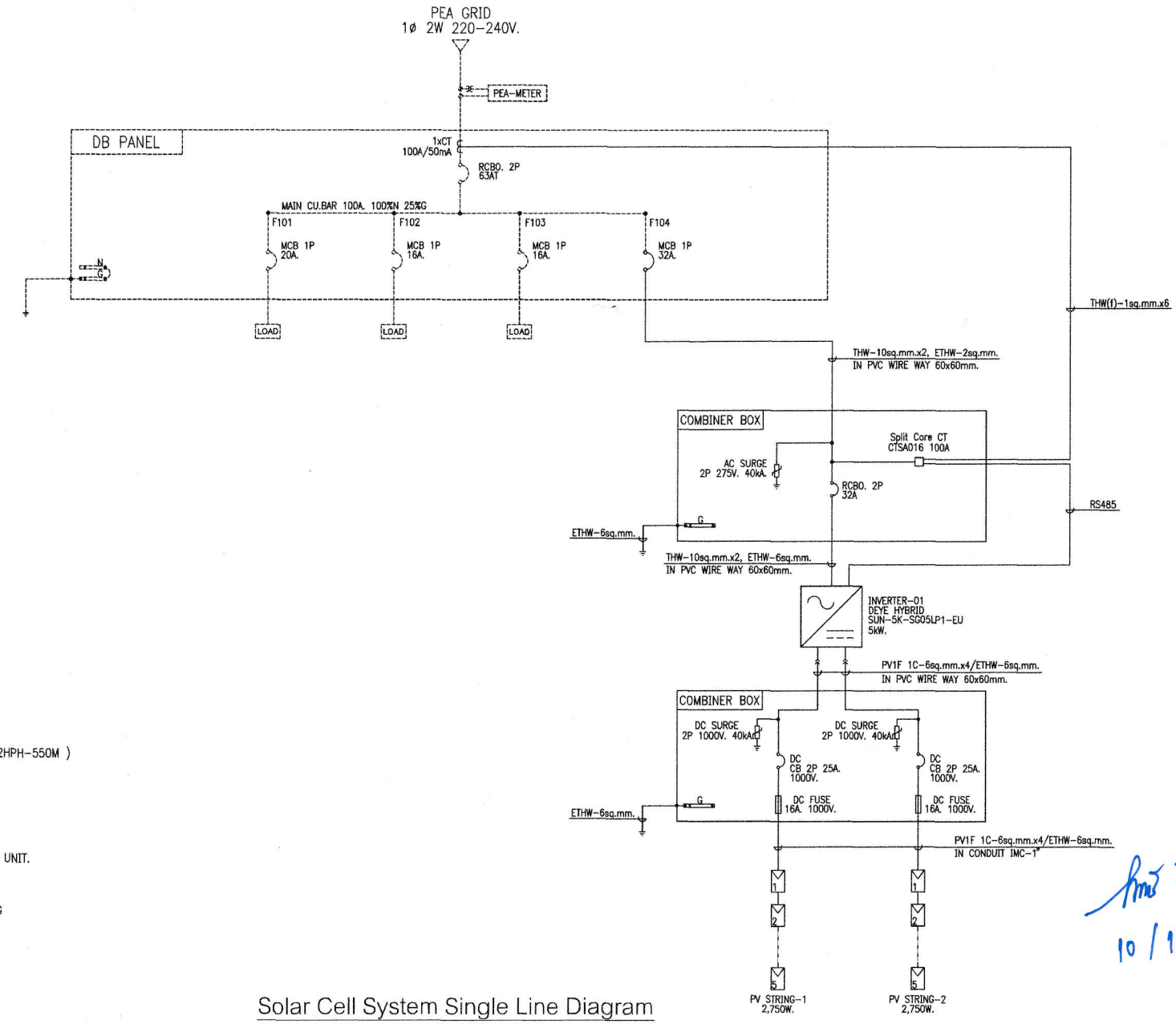


NOTE:

1. PV MODULE 550WATT ( LONGi MODEL: LR5-72HPH-550M )
2. PHYSICAL SPECIFICATION;
   -DIMENSION: 1133(W) x 2256(L) x 35(T) mm.
   -WEIGHT: 27.2kg.

INVERTER

DEYE HYBRID MODEL: SUN-5K-SG05LP1-EU = 1 UNIT.

CAPACITY

| | |
|---|---|
| PV MODULES/STRING | = 5 MODULES/1 STRING |
| TOTAL STRING | = 2 STRING |
| No. PV MODULES | = 10 MODULES |
| TOTAL CAPACITY | = 5.50 kWp |

# Solar Cell System Single Line Diagram

SCALE NONE

10/1/67

AS-BUILT DRAWING

| | | | | | |
|---|---|---|---|---|---|
| OFFTAKER : | OWNER : คุณกฤษฎ์ ภูมิประหมัน | CONTRACTOR : SOLAR ESS CO., LTD. | PROJECT NAME โครงการนิติบุคล 5.5kW 1Ph 2String | DRAWING TITLE: Solar Cell System Single Line Diagram | |
| | | | | DRAWING NO.: 001 | REV. 0 |
| | | | | DATE : | SCALE : NTS / SHEET NO. : 1 / TOTAL NO. : 1 |

STRUCTURAL ENGINEER: DRAWN BY:
ARCHITECT: CHECKED BY:
ELECTRICAL ENGINEER: เดิศฤทธิ์ดินธ์ จันทการ APPROVED BY: เดิศฤทธิ์ดินธ์ จันทการ
MECHANICAL ENGINEER:

| NO. | DESCRIPTION | DATE |
|---|---|---|
| 0 | AS-BUILT DRAWING | |

ISSUES AND REVISIONS